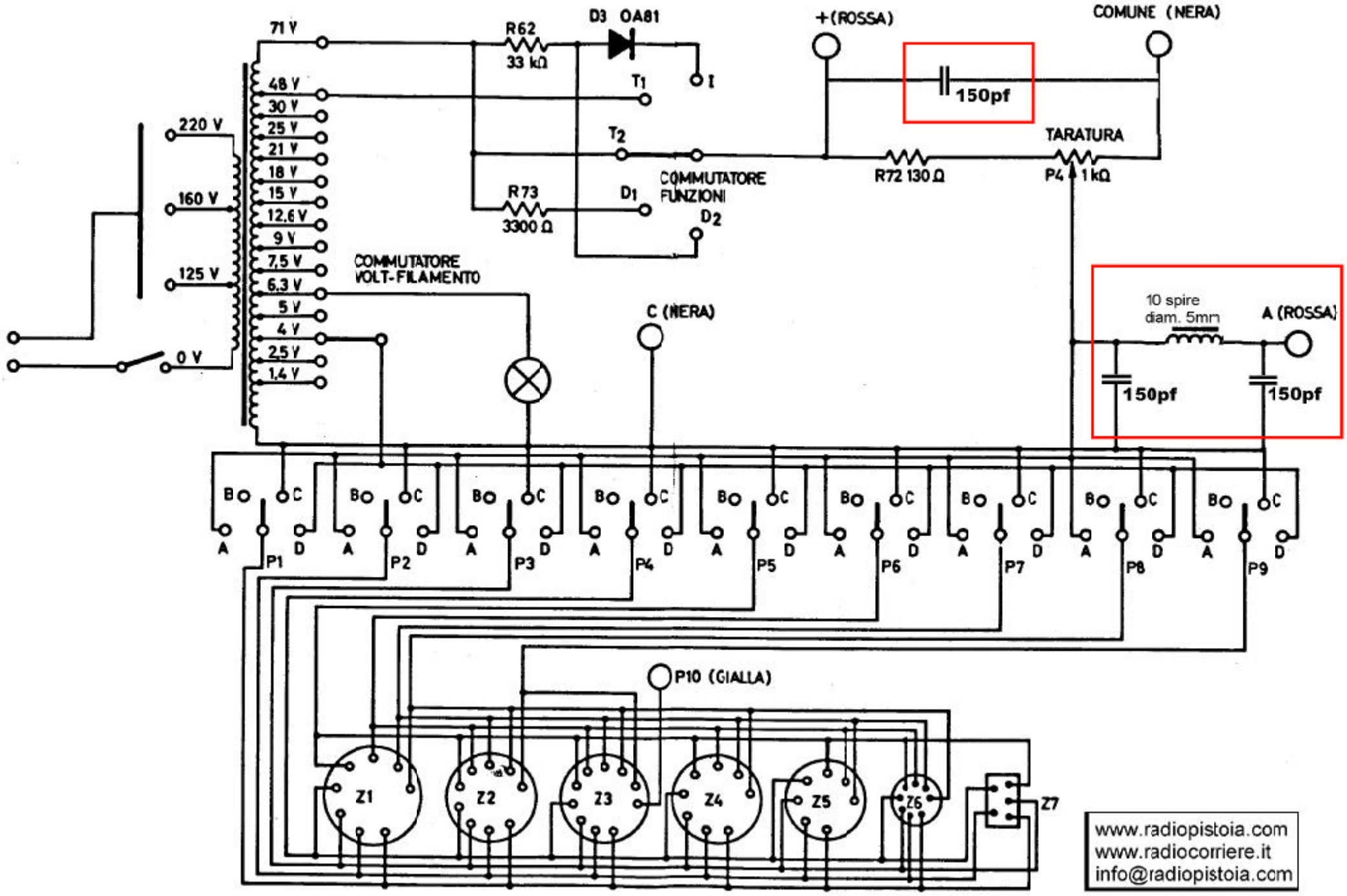

www.radiopistoia.com
www.radiocorriere.it
info@radiopistoia.com